Can Crusher

NASA H.U.N.C.H.

Passaic County Technical Institute

By: PCTI Project Lead the Way

Instructor/Supervisor: Marianne Albarez

Table of Contents

Abstract

Researchers at the National Aeronautics and Space Administration (NASA), approached high school students to help create an effective solution for crushing cans, conserving space. The current method consists of an ineffective two-bar hinge mechanism; however, the students resolved the issues occurring with the current design by re-designing the mechanism addressing the issues. Students had observed the complications with the current design such as structural deformation, difficulty applying force, uncomfortable design, and the tendency of the cans being ejected under the force. Through several iterations, the students had decided on a stainless-steel body, enclosed area for crushing, and longer bars with comforting gripped handles. Observing the issues gave us insight on our final prototype, reading throughout the report, the reader will understand the reasoning behind these decisions.

Introduction

NASA astronauts living in the ISS are seeking a more effective solution with which to address the issue regarding waste food cans and how to efficiently dispose of them. Their current tool is a can crusher, consisting of two bars. Unfortunately, it is inefficient, and requires too many individual crushes to complete its task. Furthermore, the existing can crusher produces smashed cans that occasionally have sharp edges which pose a hazard to astronauts and waste containers. Thus, the improved can crusher design must address the problems regarding ease of use and the potential for hazardous edges.

Design Brief

Client: Nasa Hunch

Designers: PLTW PM SHOP

Problem Statement:

Food from the Russian and European Space Agency is packed in steel cans which are similar to tuna cans in size. After the astronauts use the can, the empty can takes up too much space while posing a safety hazard to astronauts and their equipment because of any sharp edges left on them. To save space, the astronauts use a device to cleanly fold and crush the can while avoiding making sharp edges. However, using their current solution usually takes multiple crushes and results in sharp edges. This is a dangerous hazard in space, and the astronauts want a new device that crushes the can with as few crushes as possible, creating no sharp edges. The first hardware HUNCH flew to the I.S.S. was a Can Crusher. The HUNCH Can Crusher flew on the ISS for many years and was used by several crews. The HUNCH Can Crusher was a great first attempt but it was larger than the crew wanted and took too many crunches to get the cans small.

Design Statement:

Our team is tasked to create a new can crushing device, which is compact and efficient. The previous design was too big and bulky, making it uncomfortable for the astronauts to use. Furthermore, the current can crusher design takes too many crushes to successfully complete its task. Our design must be able to accommodate for the astronauts' demands: making it easier to use and incapable of producing dangerous, sharp edges. Our device will use two techniques to crush the can; one technique is used to compromise the can's structural integrity and the second one is used to crush the can as flat as necessary. Our device will be compact and similar to a pair pliers, but large enough to incorporate both methods for operation

Design Criteria:

- Size it for large tuna cans
- Should not leave sharp edges from gripping the can

- Mechanical, not electric
- Keep it small and simple
- Must be easy to clean with wipes
- Minimize the number of actions to condense the can
- Standard pliers, vice grips and channel locks have been tried but take several folds to flatten the can and often leave pointy corners.
- The final flight unit will be made of stainless steel for ease of cleaning and strength but early prototypes can be made of anything.

Brainstorming

Five Main Focuses on Certain Mechanisms:

1. Best ways to damage a steel can
2. Dent and crush
3. Two-step Lobster Claw
4. Cylinder with levers
5. Cylinder with crank top

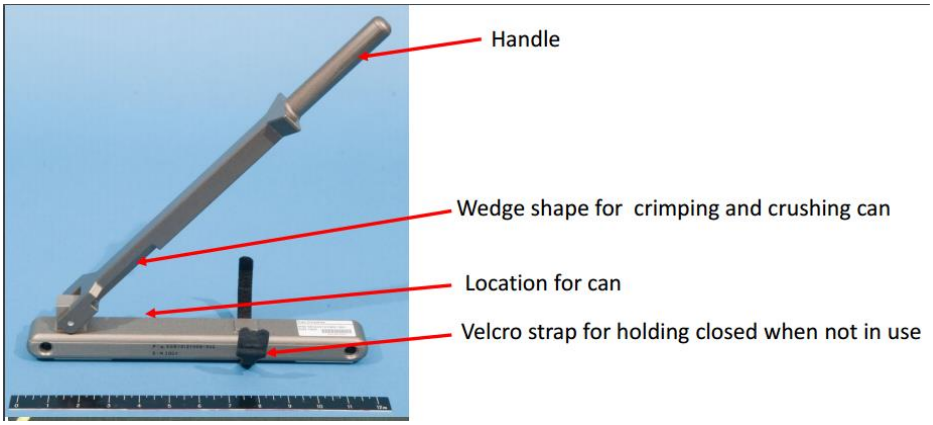

The can sizes are that of an average tuna can as well as being made out of stainless steel since Russian cans are mostly made out of the material.

The lever used in this system is what we are going to incorporate into our concept. The lever will pull the square piece down.

The idea that we are going to take from this concept is that the bolt can retract. It is in a cylindrical shape.

Pictured left are the slip-joint pliers and pictures right are garden shears. The main idea behind the lobster claw is a large, double-sided plier. The metallic end will be for denting, while the gripping end will be for crushing. A spring system, such as the one utilized in the garden shear picture, can also be incorporated into the design.

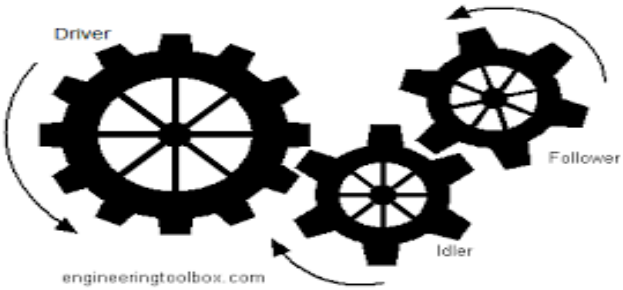

A gear train can help the screwing action go faster or with more power depending on the gear ratio

Historical Patents

Patents that can be useful to damage steel can:

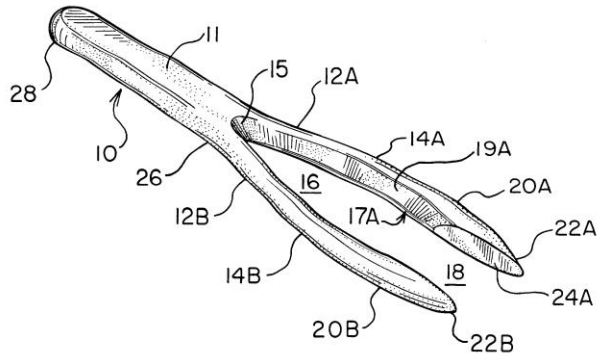

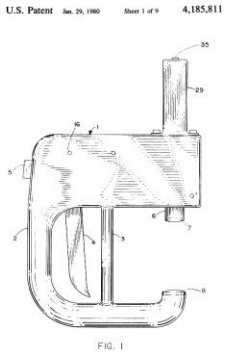

Utilitarian combination utensil

One hand held operated clamp

The PCTI team wanted a device that can damage the steel can well enough to safely crush the can without leaving any sharp edges, while still being relatively easy to use. The concept and overall function of utilitarian combination utensil and one hand help operated clamp can be used to design the can crusher.

Patents that incorporate levers to crush a can:

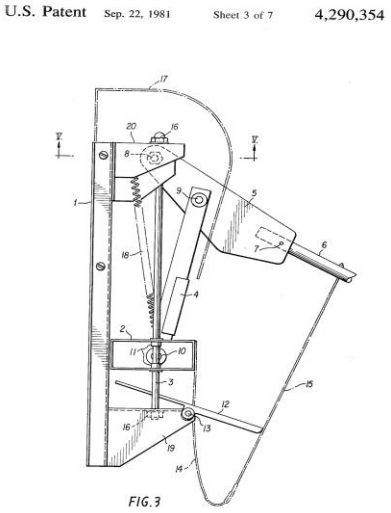

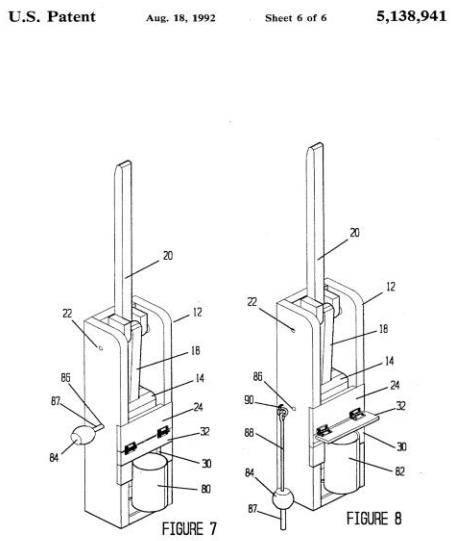

Beverage can crusher used to crush soda cans

Completely wooden can crusher that uses a lever to crush metal cans

The team took inspiration from patents on industrial can crushing machines. As seen in the patents, these machines are large scaled crushing and the team decided to utilize these ideas and concepts into a smaller scale.

Initial Design

3D Rendering:

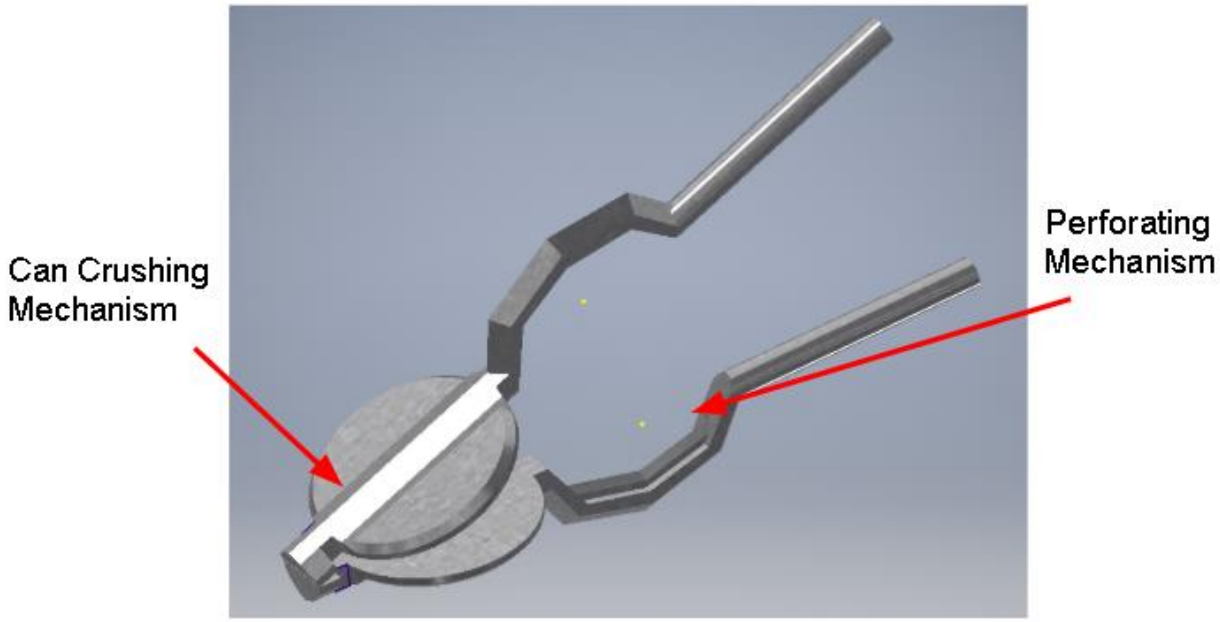

Assembly Drawing:

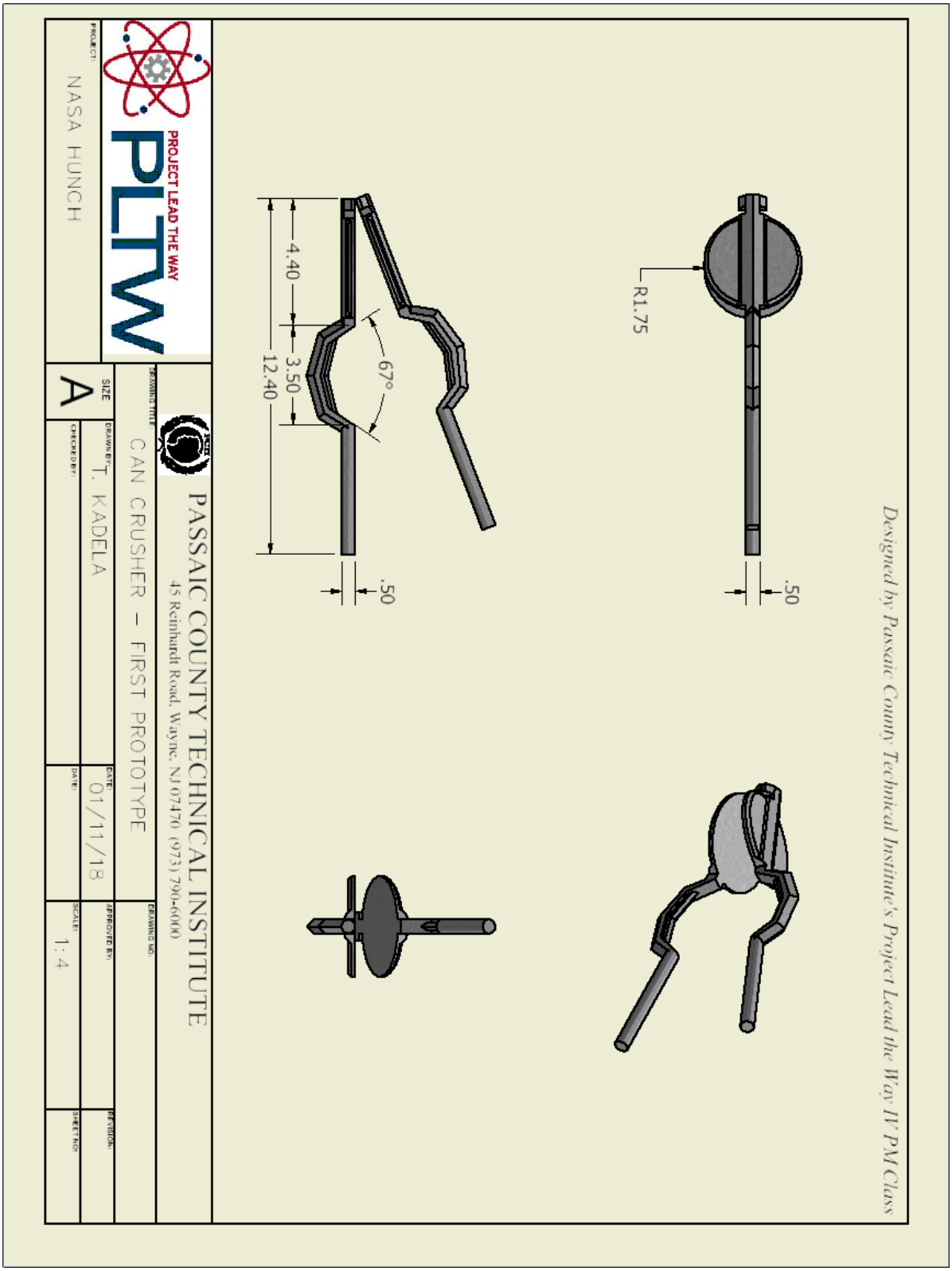

Mockup:

- Clamps made out of 3D printing material, ABS Plastic
- Sides held together by rubber bands
- Half the size of the actual can crusher

First Prototype

Assembly Drawing:

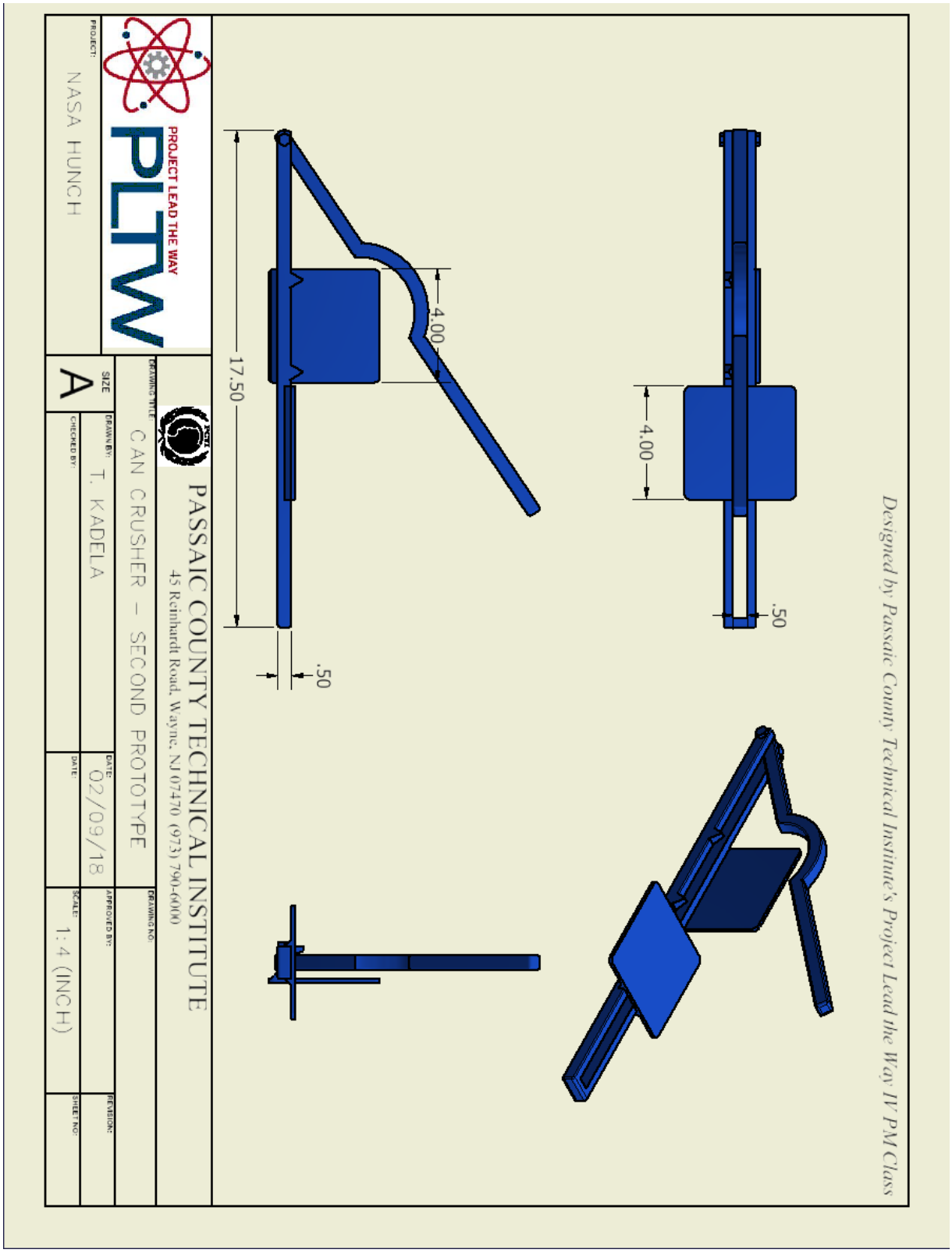

Prototype:

After the technical drawing of the initial design prototype was sent to PCTI welding, they could not exactly replicate it. They made some adjustments to the intended model, but the basic mechanism remains the same.

Problems with the first prototype:

- Cans had the possibility of being ejected.
- Cans were only crushed on one surface.
- Device was subject to structural deformation from use (Note: Ideal material is titanium).
- Handles were uncomfortable to grasp and difficult to apply force to.
- Longer lever arms would make the crushing process significantly easier.
- Cans had the tendency to eject out of the holder under force.

Final Design

Top View:

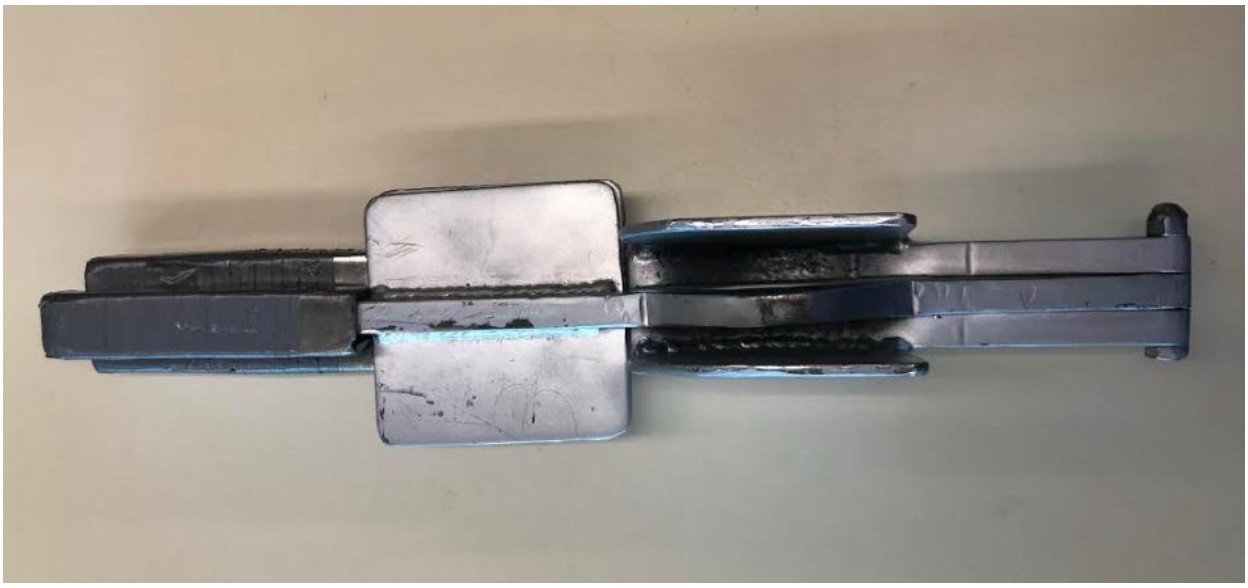

Side view:

Interior of crushing surface:

Close-up of extensions:

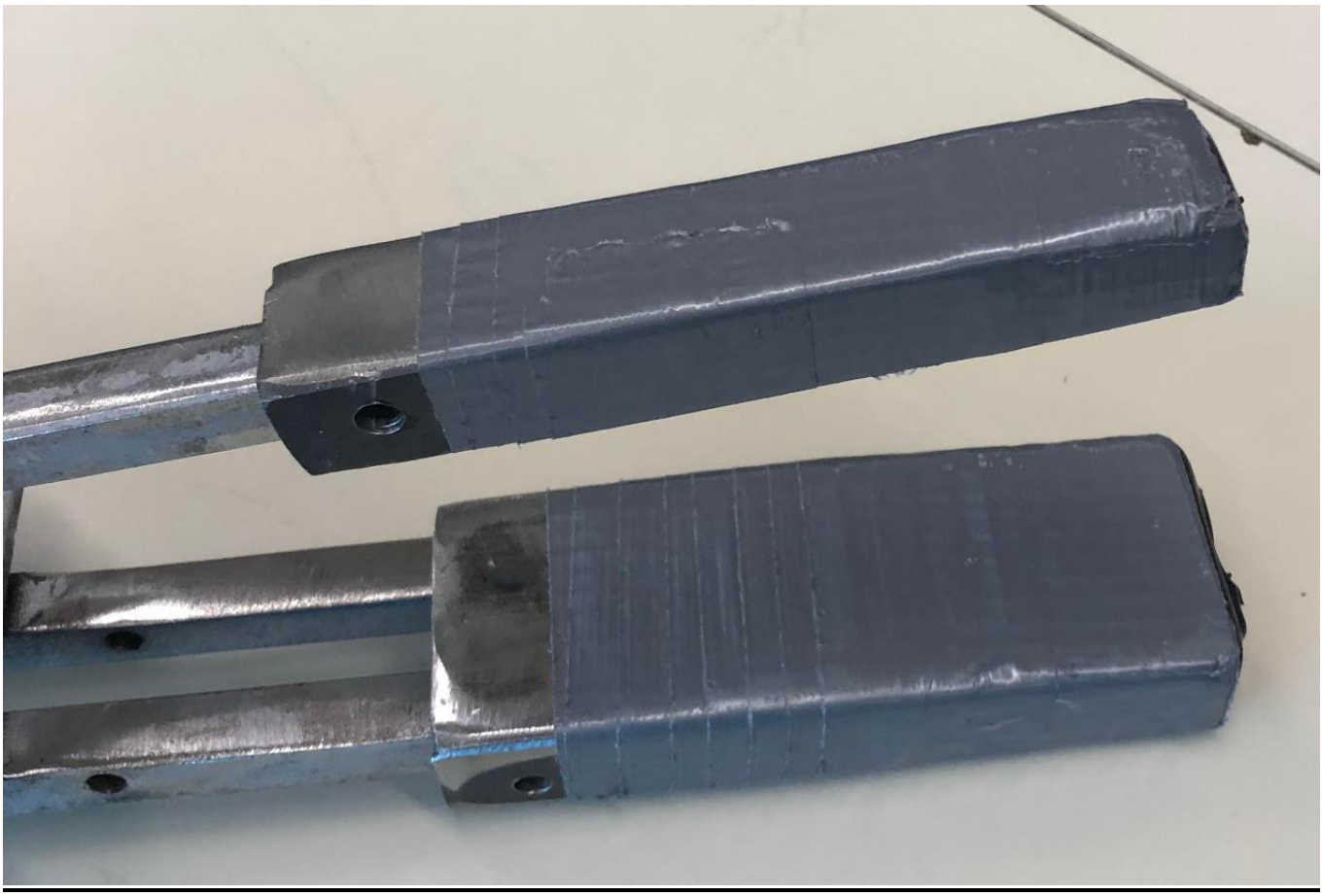

Isometric view (retracted):

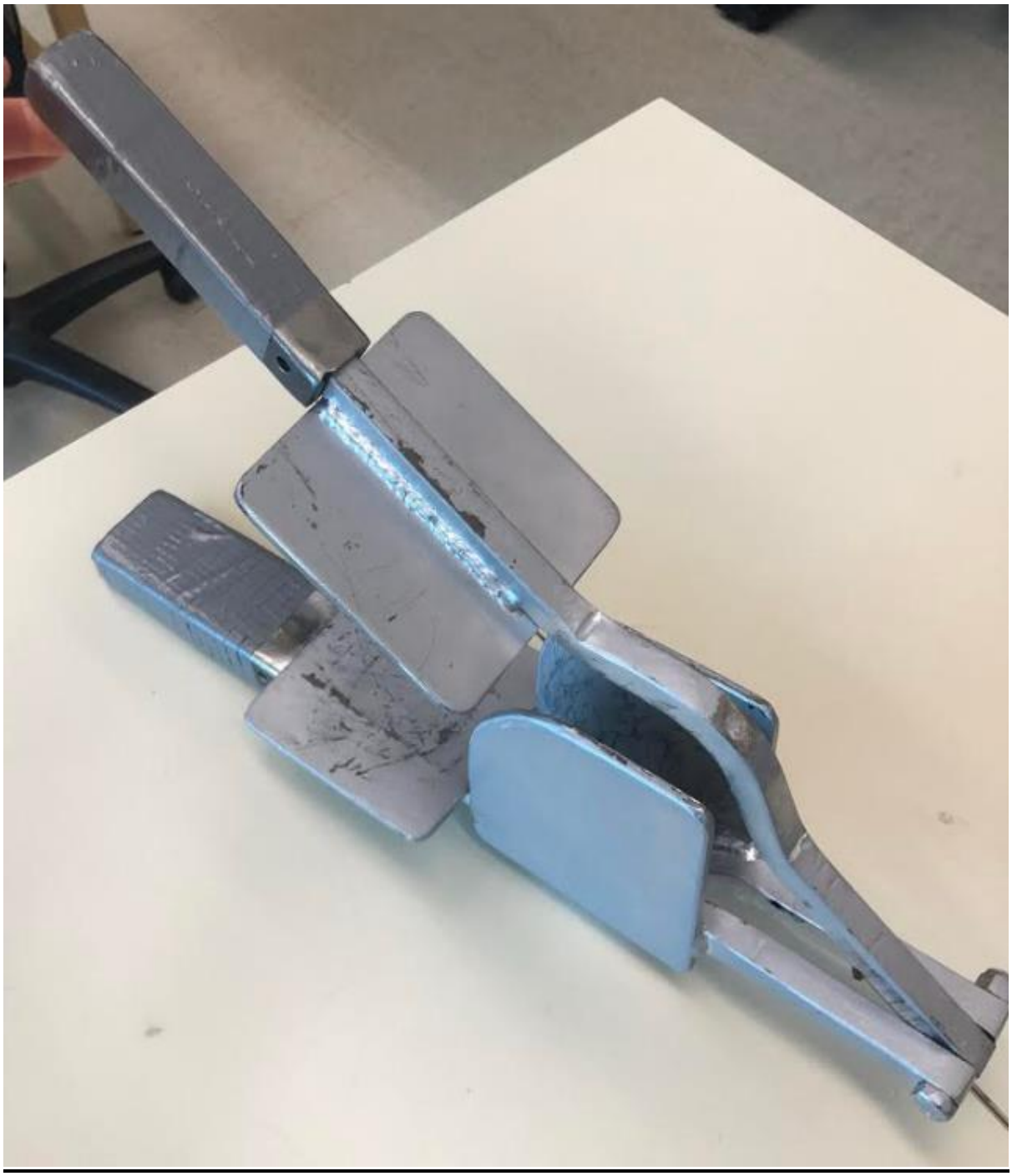

Isometric view (extended):

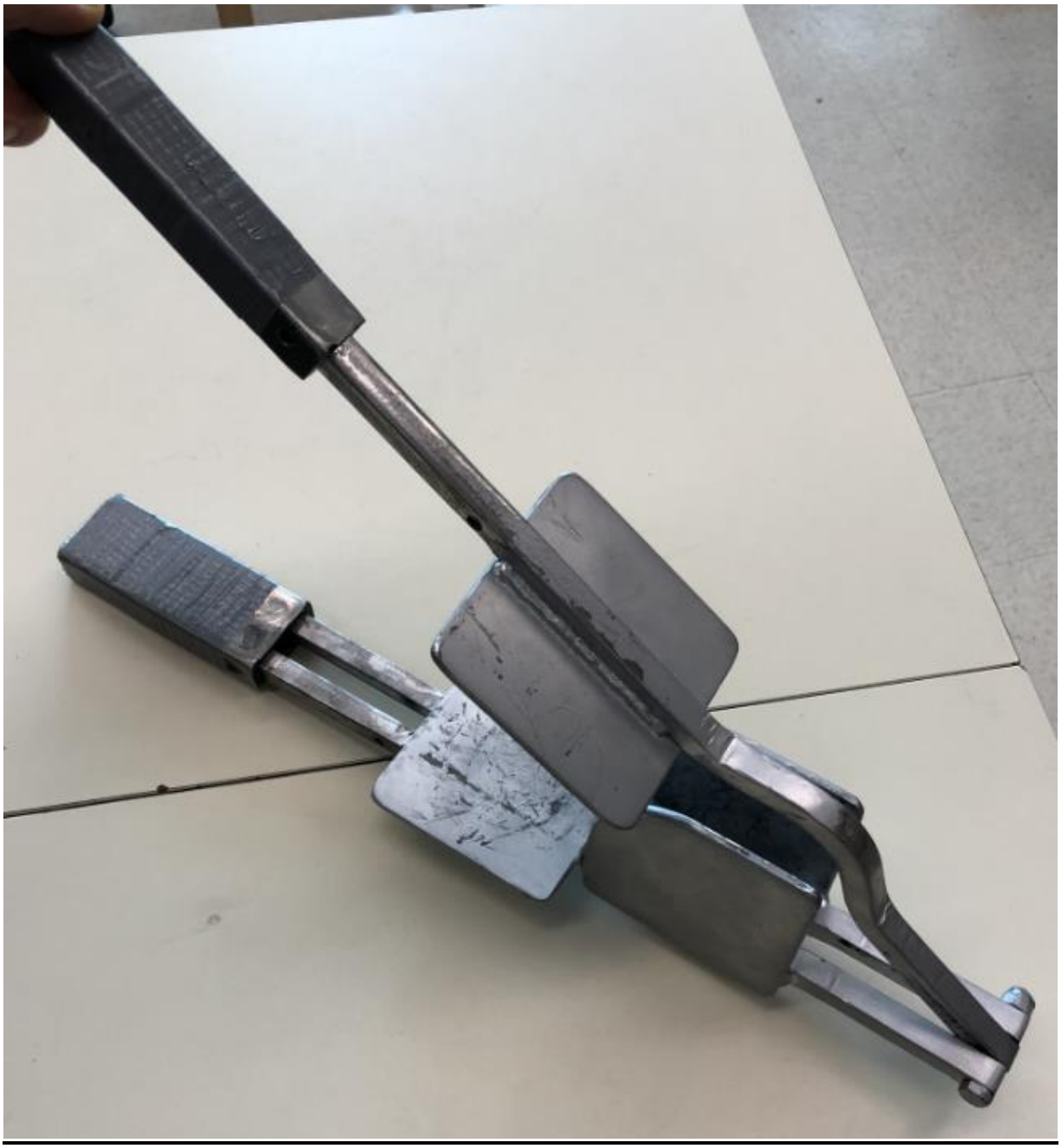

Assembly Drawing (Extended):

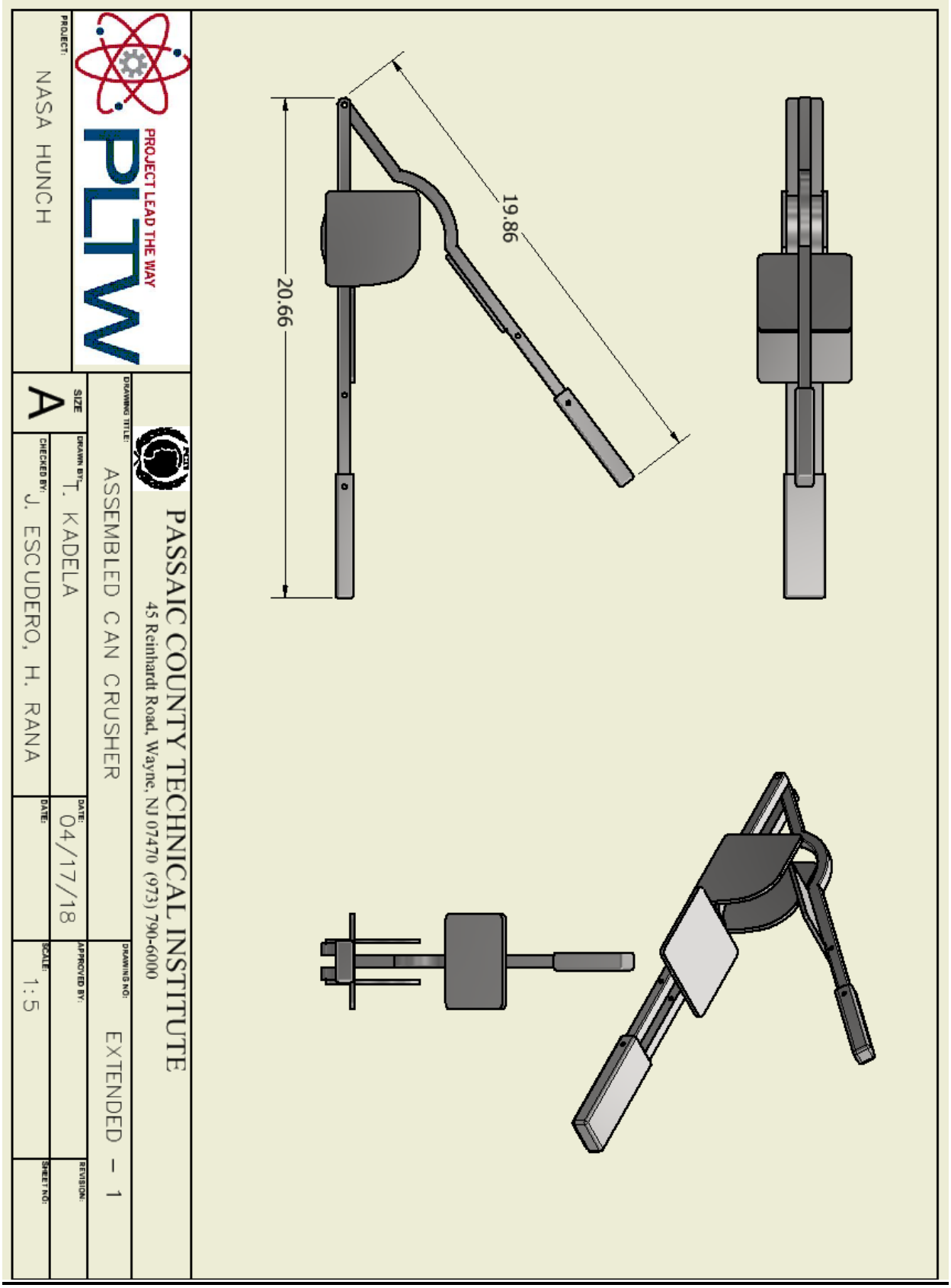

Assembly Drawing Retracted:

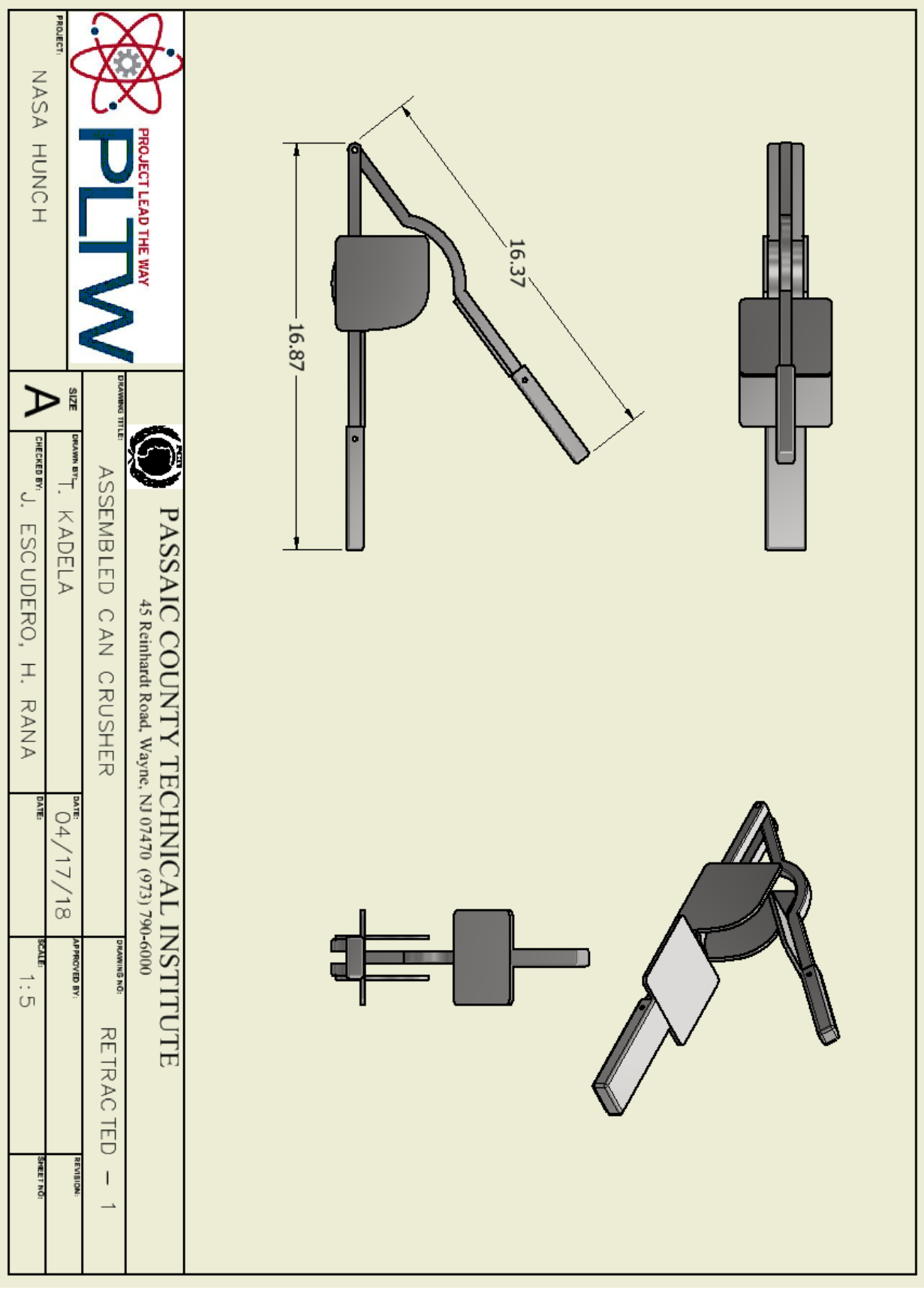

Part Drawing (Top component):

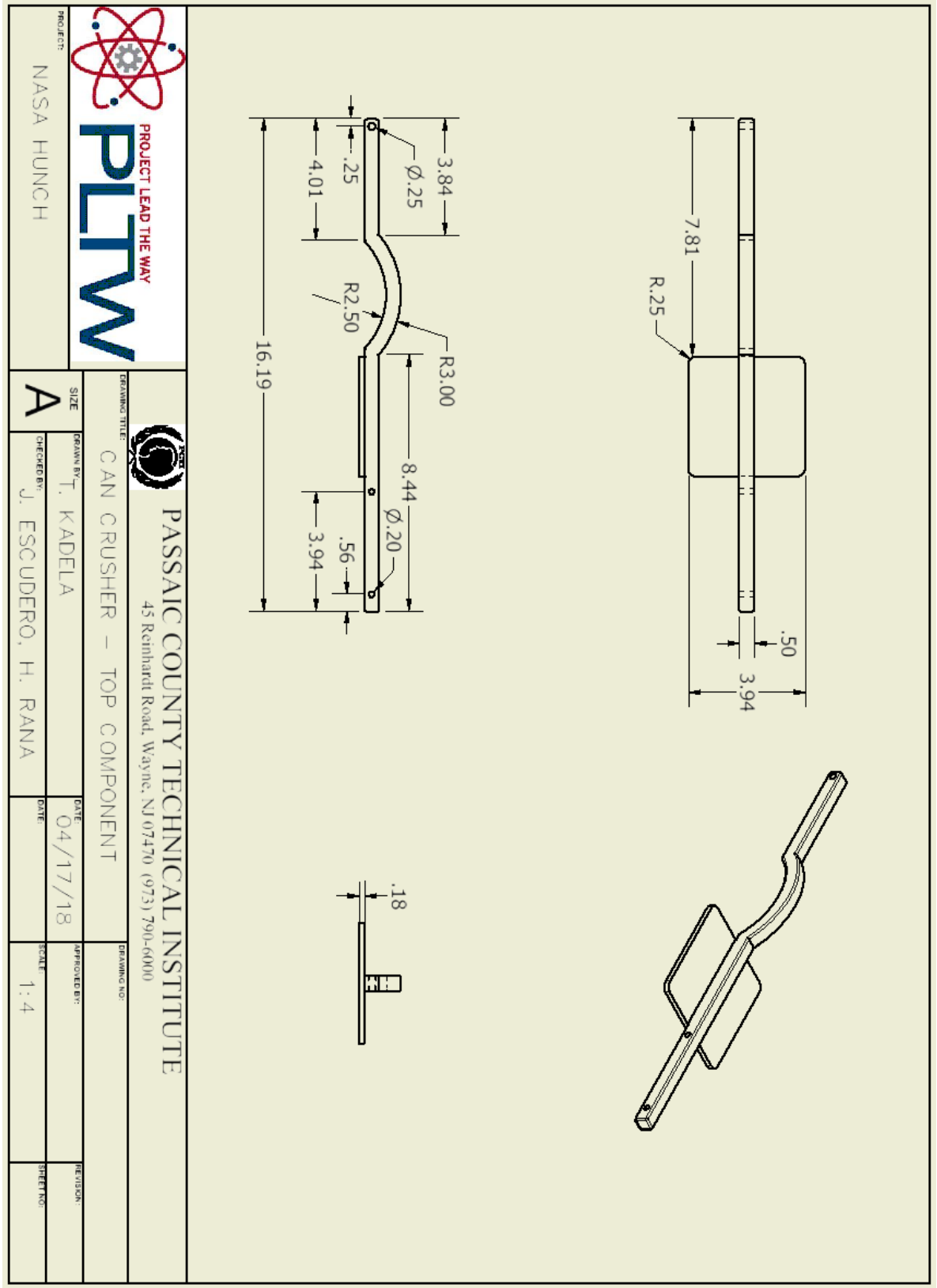

Part Drawing (Bottom component):

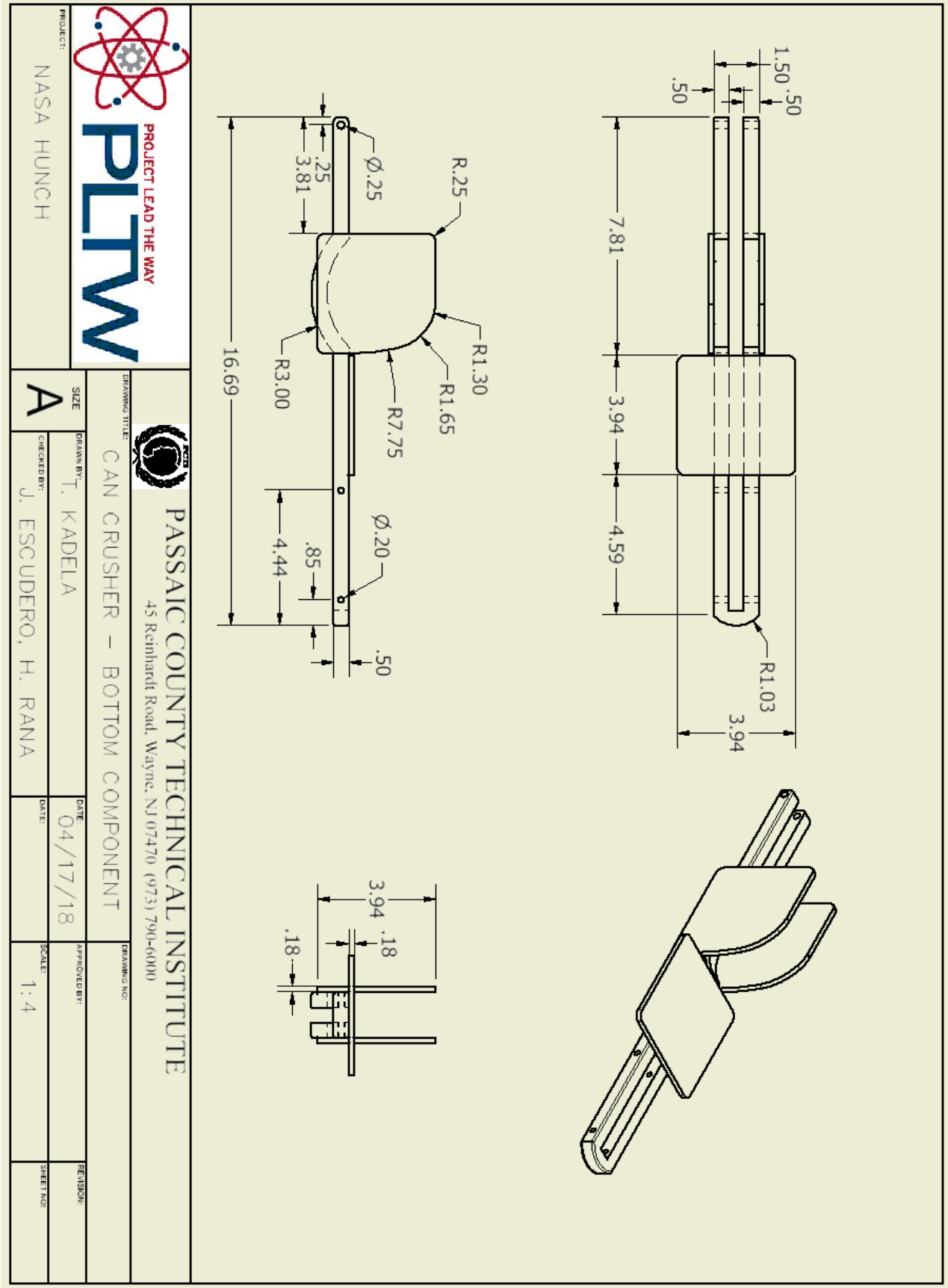

Part Drawing (Top extension):

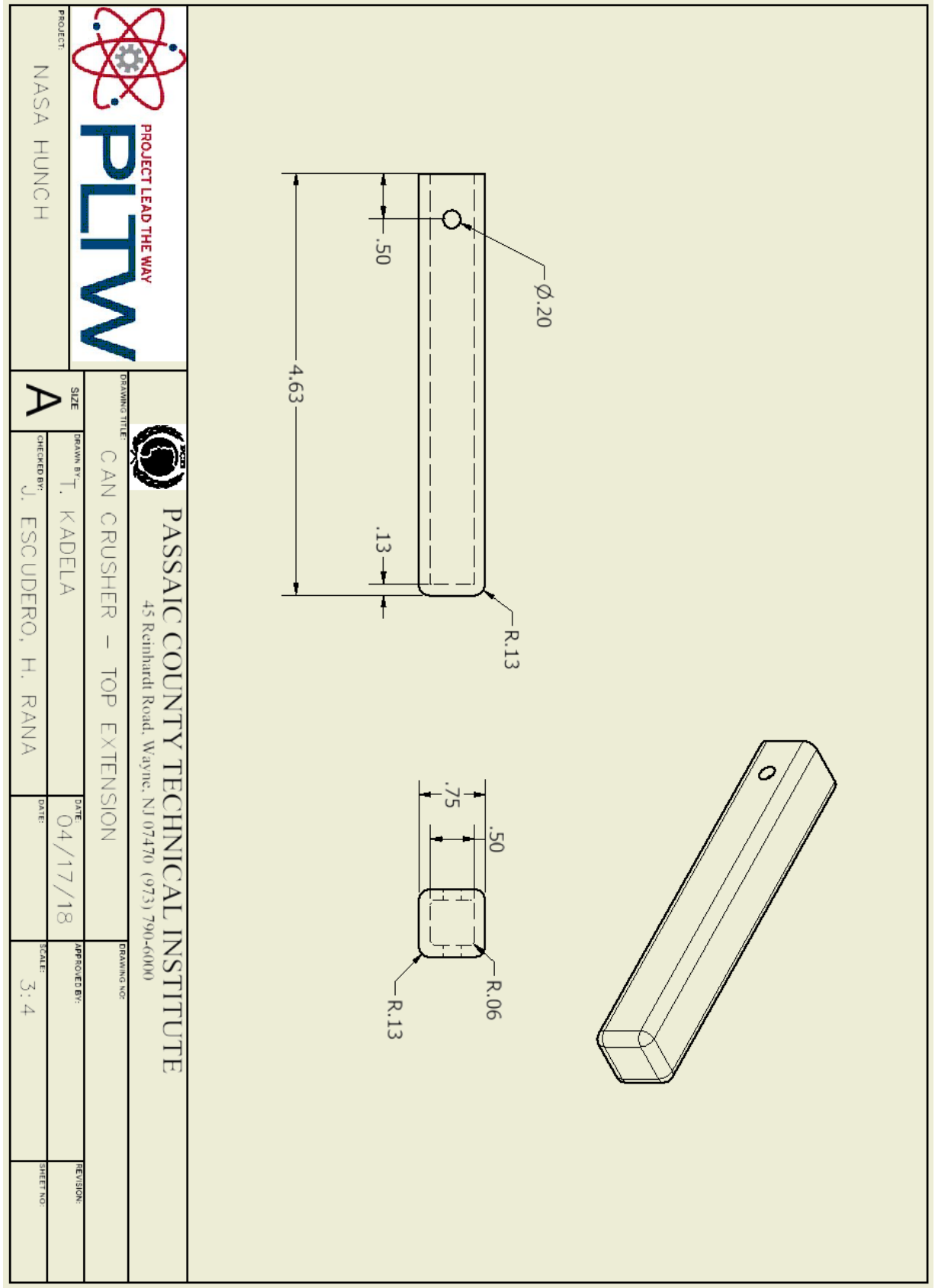

Part Drawing (Bottom extension):

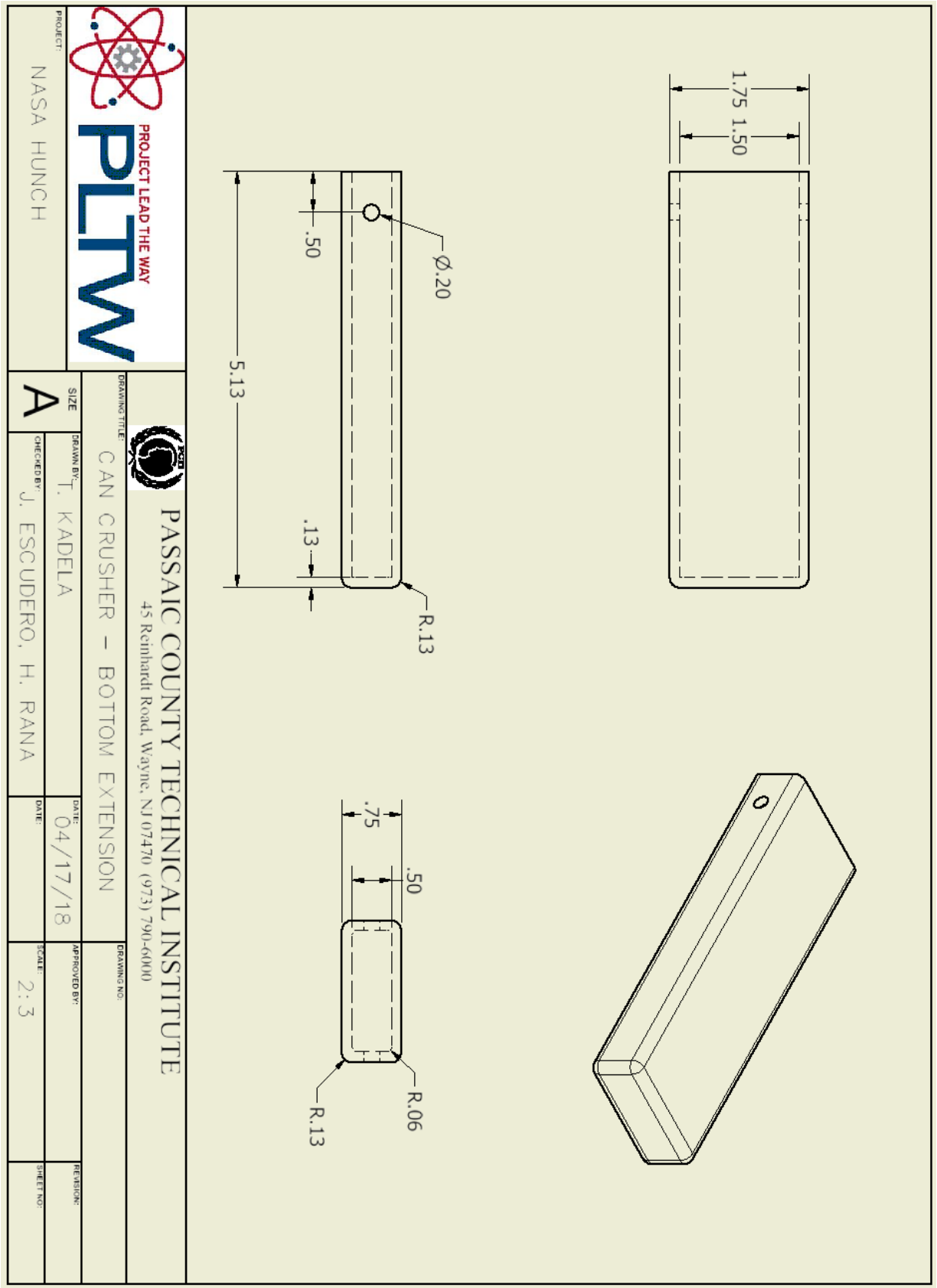

Conclusion

The objective of this project was to solve the issue regarding waste food cans and how to efficiently dispose of them. Throughout the design process many factors were taken into account and many materials were taken into consideration. The two materials that were being decided between were titanium and stainless steel. Unfortunately, titanium was outside of our budget during the design process, so we had to resort to utilizing stainless steel. This had the adverse effect of yielding a heavy design that is cumbersome, and prone to deformation under use. However, with a metal like titanium or any other strong and light alloy which is innately harder and lighter than stainless steel, the can crusher design becomes even more efficient. The extendable-handle system is also a significant addition to this second iteration of the design, since it makes the flattening process easier to execute. We settled on a design that can effectively crush a can similar to a tuna size can without much effort. One initial problem we had with one of our prototypes was that the can would slip out of the crusher when too much force was exerted. Cans had the possibility of being ejected. Additional problems with the first prototype was that cans were only crushed on one surface, the device was subjected to structural deformation, and the handles were uncomfortable to grasp and apply force to. All of these problems would be especially dangerous in the International Space System. After a heavy redesign, our final design solved all of these problems and would be significantly safer to use. From the start of the project to the end, the team learned crucial skills such as prototype designing, material selection, and the ergonomics of a design. All of these skills are used in the professional engineering industry and will benefit the team in the future.